Power Optimizer

For Residential Installations

S440 / S500 / S500B / S650B



POWER OPTIMIZER

Enabling PV power optimization at the module level

- Specifically designed to work with SolarEdge residential inverters
- Detects abnormal PV connector behavior, preventing potential safety issues*
- Module-level voltage shutdown for installer and firefighter safety
- Superior efficiency (99.5%)
- Mitigates all types of module mismatch loss, from manufacturing tolerance to partial shading
- Faster installations with simplified cable management and easy assembly using a single bolt
- Flexible system design for maximum space utilization
- Compatible with bifacial PV modules

* Functionality subject to inverter model and firmware version

solaredge

Power Optimizer

For Residential Installations

S440 / S500 / S500B / S650B

	S440	S500	S500B	S650B	UNIT
INPUT					
Rated Input DC Power[1]	440	500		650	W
Absolute Maximum Input Voltage (Voc)	60		125	85	Vdc
MPPT Operating Range	8 – 60		12.5 – 105	12.5 - 85	Vdc
Maximum Short Circuit Current (Isc) of Connected PV Module	14.5	15			Adc
Maximum Efficiency	99.5				%
Weighted Efficiency	98.6				%
Overvoltage Category	II				
OUTPUT DURING OPERTION					
Maximum Output Current	15				Adc
Maximum Output Voltage	60		80		Vdc
OUTPUT DURING STANDBY (POWER OPTIMIZER DISCONNECTED FROM INVERTER OR INVERTER OFF)					
Safety Output Voltage per Power Optimizer	1 ± 0.1				Vdc
STANDARD COMPLIANCE[2]					
EMC	FCC Part 15 Class B, IEC61000-6-2, IEC61000-6-3, CISPR11, EN-55011				
Safety	IEC62109-1 (class II safety), UL1741				
Material	UL94 V-0, UV Resistant				
RoHS	Yes				
Fire Safety	VDE-AR-E 2100-712:2018-12				
INSTALLATION SPECIFICATIONS					
Maximum Allowed System Voltage	1000				Vdc
Dimensions (W x L x H)	129 x 155 x 30		129 x 165 x 45		mm
Weight	720		790		gr
Input Connector	MC4[3]				
Input Wire Length	0.1				m
Output Connector	MC4				
Output Wire Length	(+) 2.3, (-) 0.10				m
Operating Temperature Range[4]	-40 to +85				˚C
Protection Rating	IP68				
Relative Humidity	0 – 100				%

(1) Rated power of the module at STC will not exceed the Power Optimizer Rated Input DC Power. Modules with up to +5% power tolerance are allowed.
(2) For details about CE compliance, see Declaration of Conformity – CE.
(3) For other connector types please contact SolarEdge.
(4) Power de-rating is applied for ambient temperatures above +85°C for S440 and S500, and for ambient temperatures above +75°C for S500B. Refer to the Power Optimizers Temperature De-Rating Technical Note for details.

PV System Design Using a SolarEdge Inverter[5]		SolarEdge Home Wave Inverter Single Phase	SolarEdge Home Short String Inverter Three Phase	Three Phase for 230/400V Grid	Three Phase for 277/480V Grid	
Minimum String Length (Power Optimizers)	S440, S500	8	9	16	18	
	S500B, S650B	6	8	14		
Maximum String Length (Power Optimizers)		25	20	50		
Maximum Continuous Power per String		5700	5625	11250	12750	W
Maximum Allowed Connected Power per String (Permitted only when the power difference between strings is less than 2,000W)		See[6]	See[6]	13500	15000	W
Parallel Strings of Different Lengths or Orientations		Yes				

(5) It is not allowed to mix S-series and P-series Power Optimizers in new installations.
(6) If the inverter's rated AC power ≤ maximum nominal power per string, then the maximum power per string will be able to reach up to the inverters maximum input DC power. Refer to Application Note: Single String Design Guidelines.

S440, S500 (Flat Bracket)

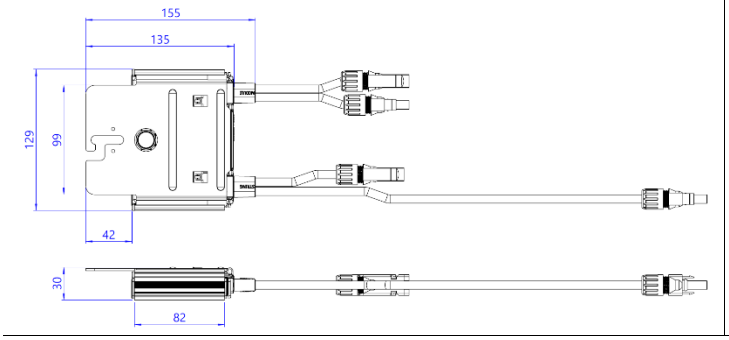

S500B, S650B (Bent Bracket)

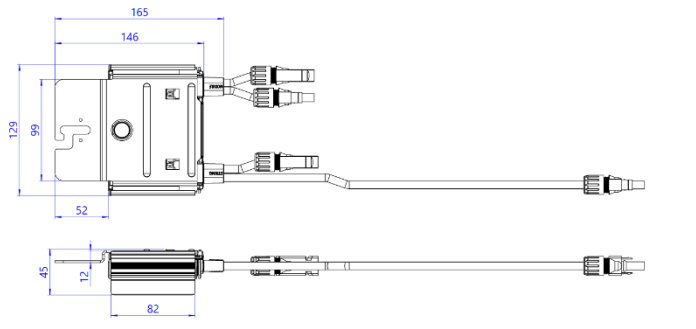

© SolarEdge Technologies, Ltd. All rights reserved. SOLAREDGE, the SolarEdge logo, OPTIMIZED BY SOLAREDGE are trademarks or registered trademarks of SolarEdge Technologies, Inc. All other trademarks mentioned herein are trademarks of their respective owners. Date: February 16, 2023 DS-000091-ENG. Subject to change without notice.

CE RoHS