E-CURB System

The *E-CURB* penetration pieces consist of the following sizes and colors:

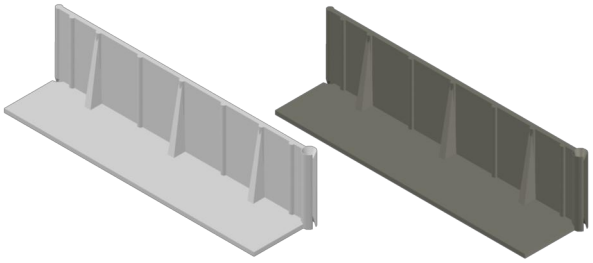

E-CURB Straights

8" straight sections used to lengthen the *E-CURB*.

F1356WH (White)
-Contains 16 straights per carton only.

F1356GR (Gray)
-Contains 16 straights per carton only.

E-CURB Corners

2" corner pieces used with straight sections to make box shapes.

F1355WH (White)
-Contains 16 Corners per carton only.

F1355GR (Gray)
-Contains 16 Corners per carton only.



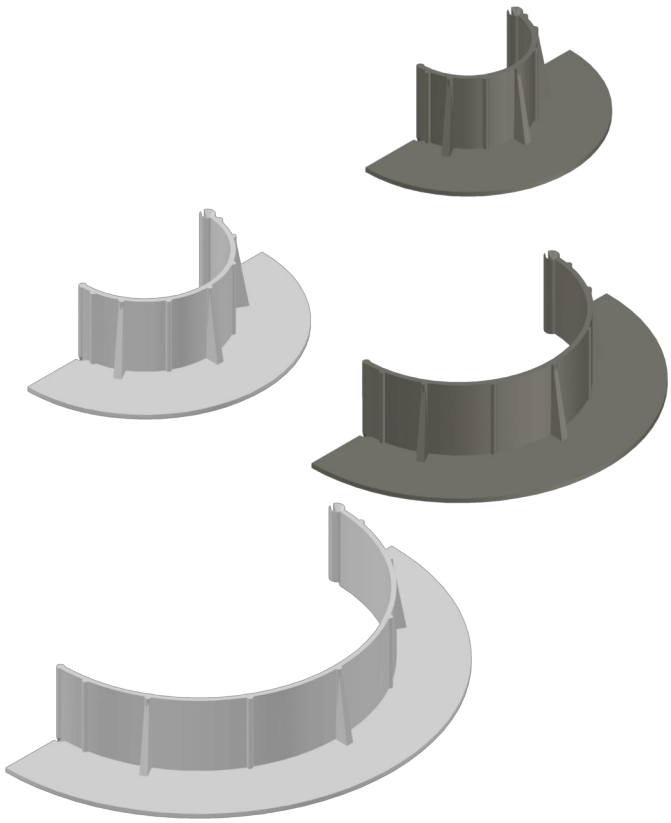

E-CURB Diameter Rounds

3" diameter round consisting of (2) 1.5" radius pcs.

F1331 (Gray only complete 1-Part™ & M-1® kit)
-Contains 10 complete curbs per carton only.

F1333 (Gray components only)
-Contains 24 curbs only per carton.

4" diameter round consisting of (2) 2" radius pcs.

F1354WH or F1354GR (complete 1-Part™ & M-1® kit)
-Contains 4 complete curbs per carton only.

F1357WH or F1357GR (components only)
-Contains 12 curbs only per carton.

6" diameter round consisting of (2) 3" radius pcs.

F1350WH or F1350GR (complete 1-Part™ & M-1® kit)
-Contains 3 complete curbs per carton only.

F1352WH or F1352GR (components only)
-Contains 6 curbs only per carton.

9" diameter round consisting of (2) 4.5" radius pcs.

F1351WH of F1351GR (complete 1-Part™ & M-1® kit)
-Contains 2 complete curbs per carton only.

F1353WH or F1353GR (components only)
-Contains 5 curbs only per carton.

CHEM LINK® A SOPREMA GROUP COMPANY

CONTACT INFORMATION: Customer Service: 800.826.1681
www.ChemLink.com

Date:	Title:	Sheet:	DRW #:	Drawn by:
May 13, 2022	E-CURBs	1 of 16	CL-EC-01	Christian Appold

HOW TO CALCULATE E-CURB VOLUMES

Note: These figures represent volume of sealant needed for various sizes of curb combinations **without displacement for penetrations.** (To estimate exact volume needed, also figure volume of penetrations and subtract from volume of curbs.)

To figure volume of a square curb: Multiply length x width x depth, (2") x (quantity of curbs needed) the divide by 231 (in³ in a gal.) to get the number of gallons needed to fill the curb.

Note:

One gal. pourable sealer = 231 in³
One ½ gal. pouch = 115.5 in³
One 28 oz cartridge = 50 in³
One 10.1 oz cartridge = 4.18 in³

Always figure 2" depth of E-Curbs. Less invalidates warranty. A corner curb adds two inches to a straight curb on <u>each end</u>.

Examples:

<u>Four 8" Straights + Four 2" Corners</u>
Form a square 12" x 12" x 2" deep.
Multiply 12" x 12" x 2" = 288 in³
Divide 288 in³ by 231 = 1.25 gal

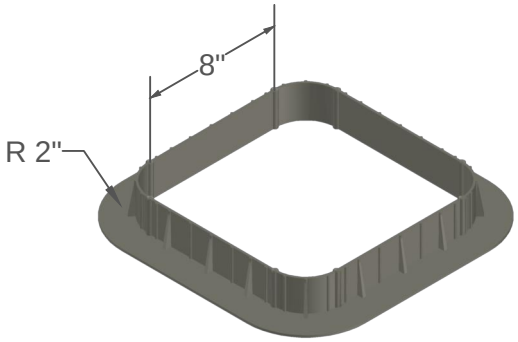

<u>3" round Curb + two 8" Straights</u>
Form an oval 11" x 3" x 2" deep.
Multiply 11" x 3" x 2" = 66 in³
Divide 66 in³ by 231 = 0.30 gal

<u>4" round Curb + two 8" Straights</u>
Form an oval 12" x 4" x 2" deep.
Multiply 12" x 4" x 2" = 96 in³
Divide 96 in³ by 231 = 0.42 gal

<u>6" round Curb + two 8" Straights</u>
Form an oval 14" x 6" x 2" deep.
Multiply 14" x 6" x 2" = 168 in³
Divide 168 in³ by 231 = 0.73 gal

<u>9" round Curb + two 8" Straights</u>
Form an oval 17" x 9" x 2" deep.
Multiply 17" x 9" x 2" = 306 in³
Divide 306 in³ by 231 = 1.32 gal

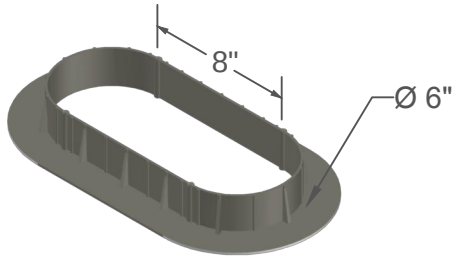

To figure volume of a round curb: multiply (radius squared x 3.14 x depth) x (quantity of curbs needed) then divide by 231 (in³/gal) to get the number of gallons needed to fill the curb.

<u>3" round Curb</u>
Form a diameter 3" x 2" deep.
Multiply 1.5" squared x 3.14 x 2" = 14.13 in³
Divide 14.13 in³ by 231 = 0.06 gal

<u>4" round Curb</u>
Form a diameter 4" x 2" deep.
Multiply 2" squared x 3.14 x 2" = 25.12 in³
Divide 25.12 in³ by 231 = 0.11 gal

<u>6" round Curb</u>
Form a diameter 6" x 2" deep.
Multiply 3" squared x 3.14 x 2" = 57.52 in³
Divide 57.52 in³ by 231 = 0.25 gal

<u>9" round Curb</u>
Form a diameter 9" x 2" deep.
Multiply 4.5" squared x 3.14 x 2" = 127.17 in³
Divide 127.17 in³ by 231 = 0.55 gal

CHEM LINK® A SOPREMA® GROUP COMPANY

CONTACT INFORMATION: Customer Service: 800.826.1681
www.ChemLink.com

M-1 APPLICATION TO THE BOTTOM OF THE E-CURB SECTIONS

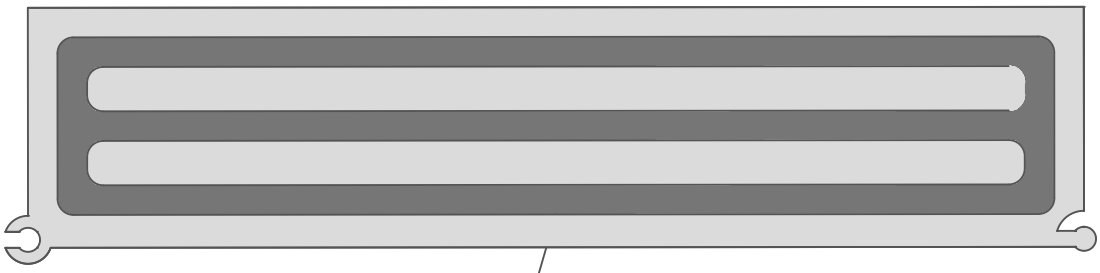

Apply $\frac{1}{4}$" diameter beads of M-1® as shown, to the bottom of each *E-CURB* section.
DO NOT TOOL THE M-1® BEADS SMOOTH!

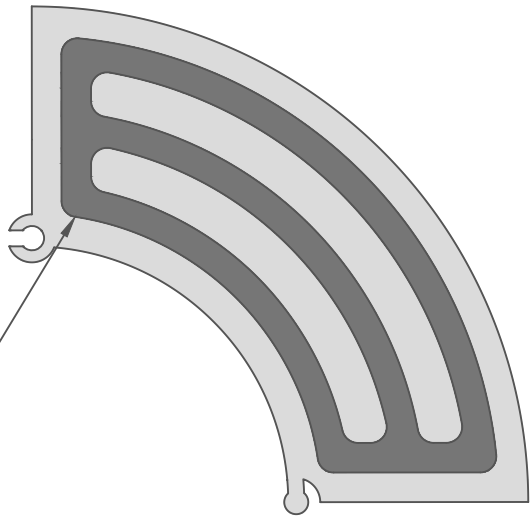

Apply $\frac{1}{4}$" diameter beads of M-1® as shown, to the bottom of each *E-CURB* section.
DO NOT TOOL THE M-1® BEADS SMOOTH!

Apply $\frac{1}{4}$" diameter beads of M-1® as shown, to the bottom of each *E-CURB* section.
DO NOT TOOL THE M-1® BEADS SMOOTH!

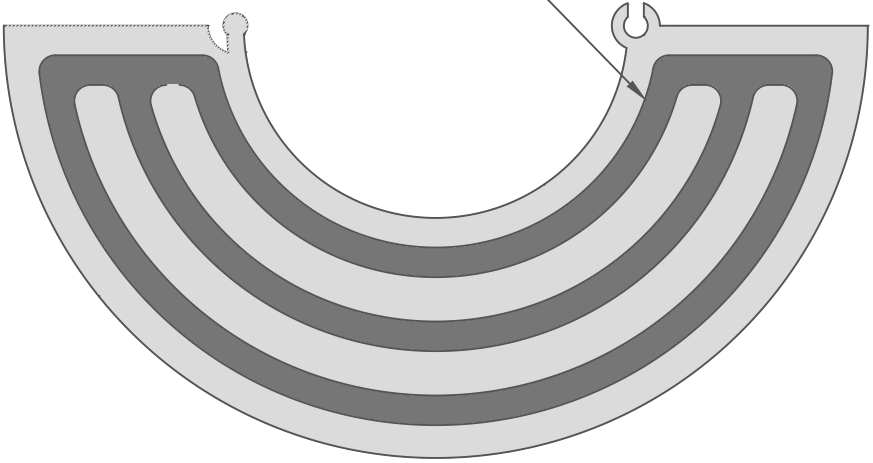

CHEM LINK® A SOPREMA® GROUP COMPANY

CONTACT INFORMATION: Customer Service: 800.826.1681
www.ChemLink.com

Date: May 12, 2013	Title: E-CURBs	Sheet: 3 of 16	DRW #: CL-EC-01	Drawn by: Christian Appold

SECTION VIEW

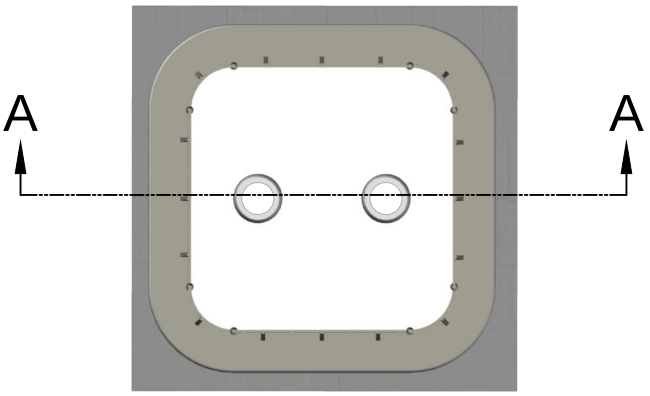

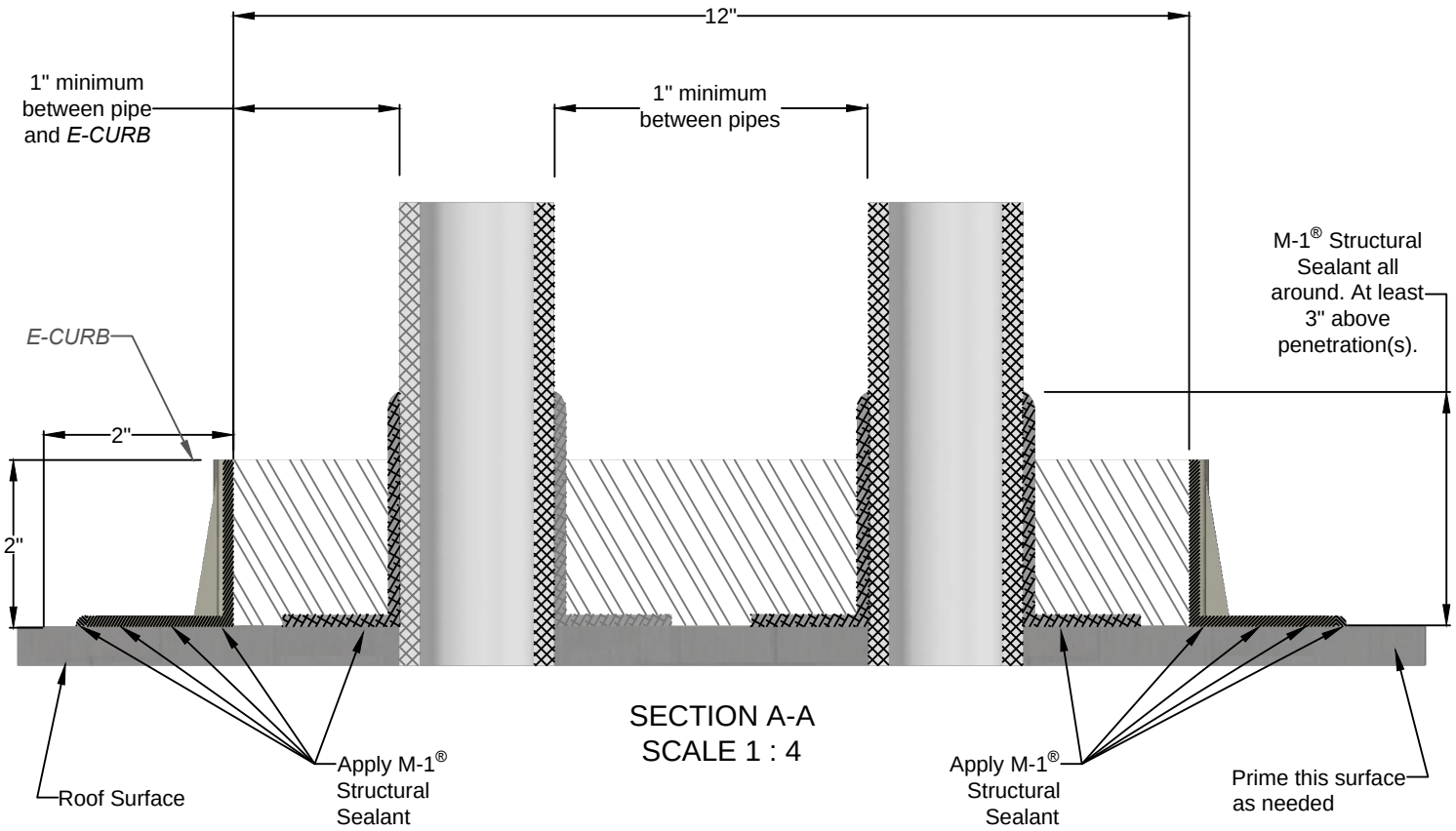

SECTION A-A
SCALE 1 : 4

CHEM LINK® A SOPREMA® GROUP COMPANY

CONTACT INFORMATION: Customer Service: 800.826.1681
www.ChemLink.com

Date:	Title:	Sheet:	DRW #:	Drawn by:
May 12, 2013	E-CURBs	4 of 16	CL-EC-01	Christian Appold

SECTION VIEW

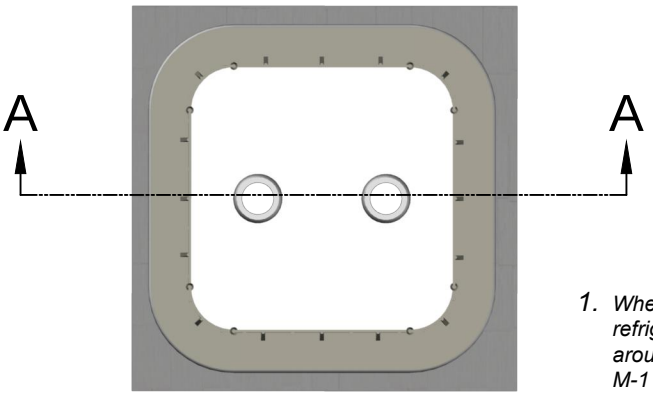

1. *When installing our E-Curb System around refrigeration lines, ensure that the insulation around the pipe is above the height of where M-1 is to be applied.*
2. *M-1 must extend 1" above the height of the E-Curb. Insulation above the height of the M-1 can then be applied to the pipe.*

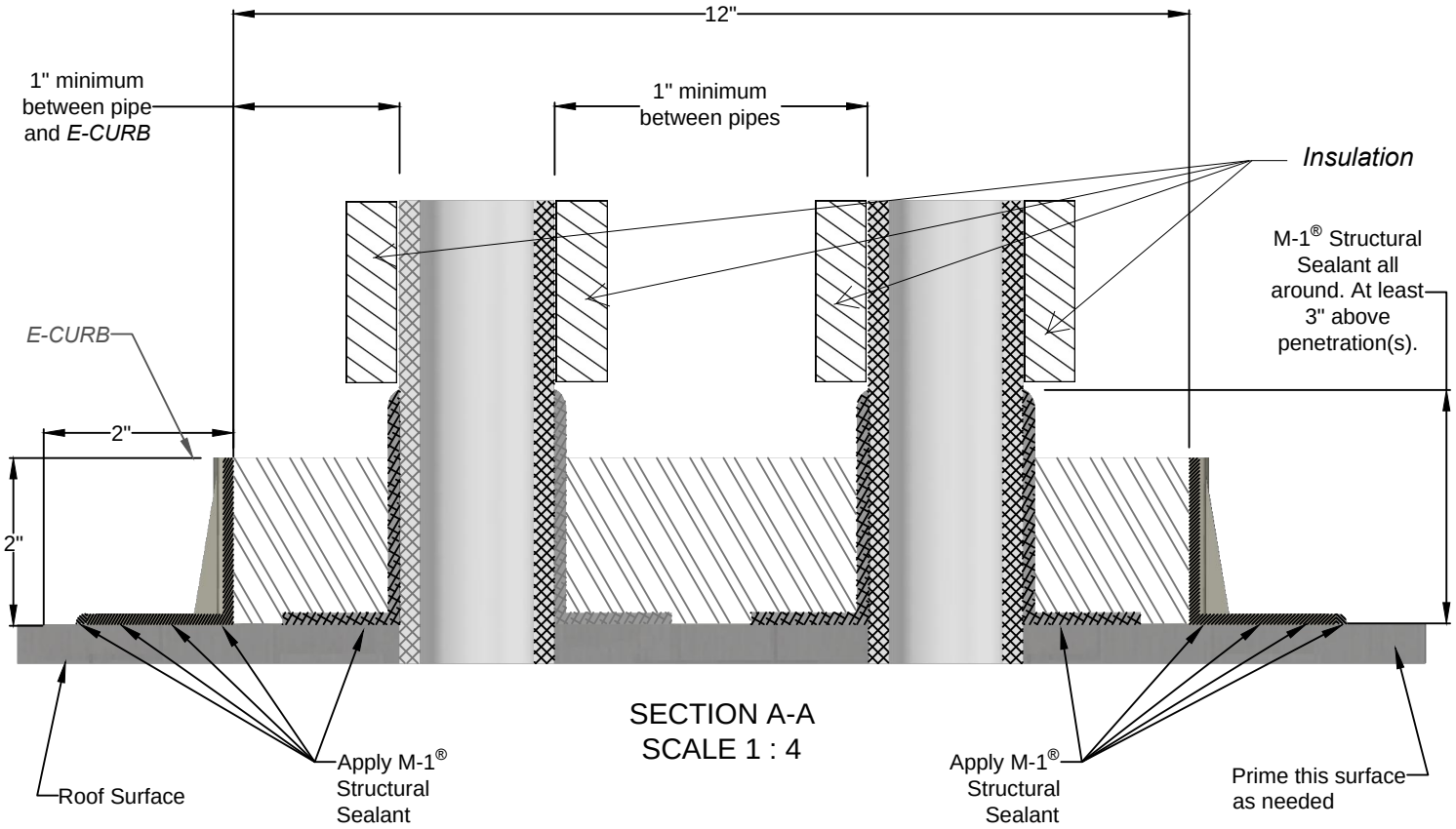

SECTION A-A
SCALE 1 : 4

STANDARD E-CURB DETAIL

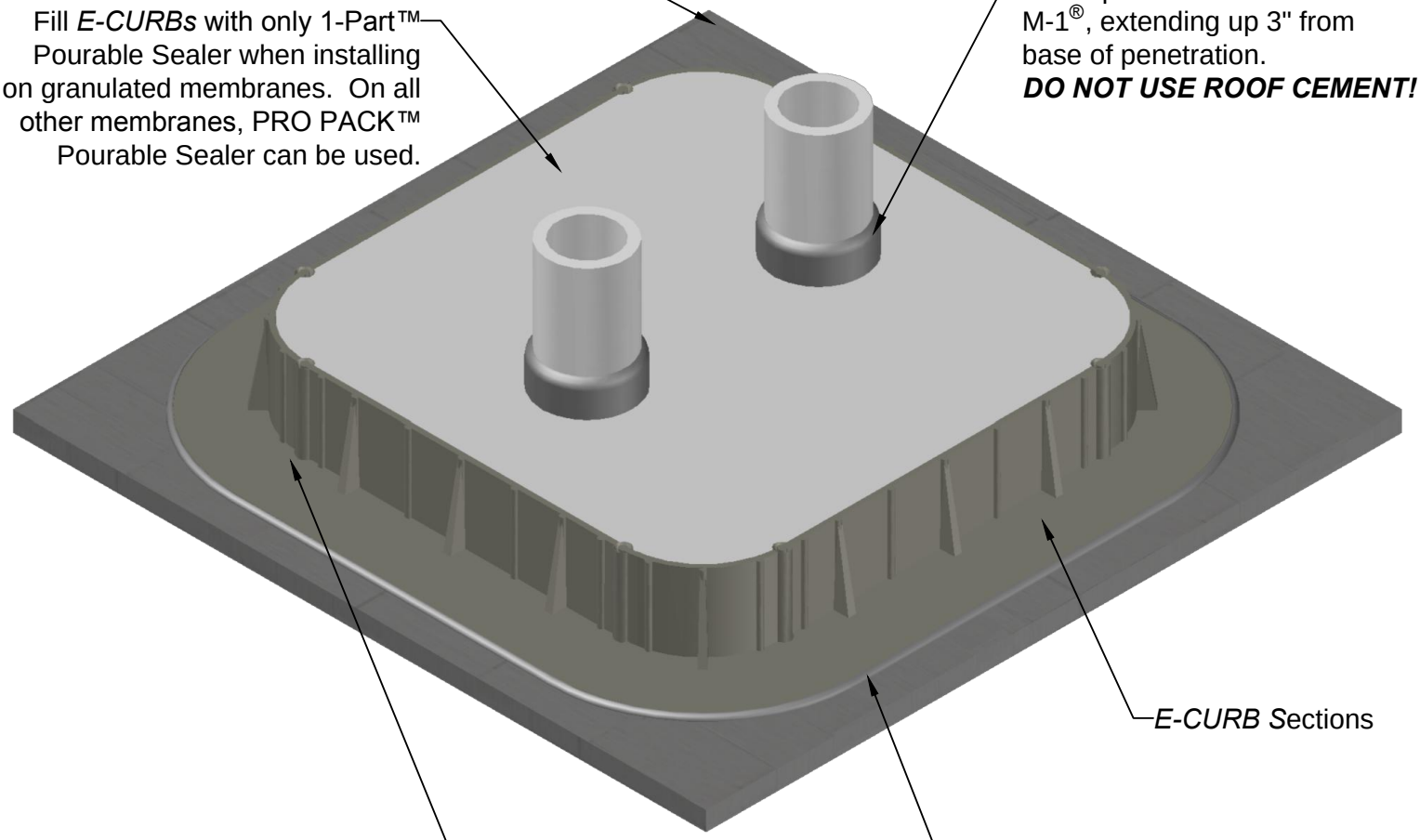

A minimum 1" space is required between all penetrations and the interior wall of all E-CURBs.

H - BEAM PENETRATION

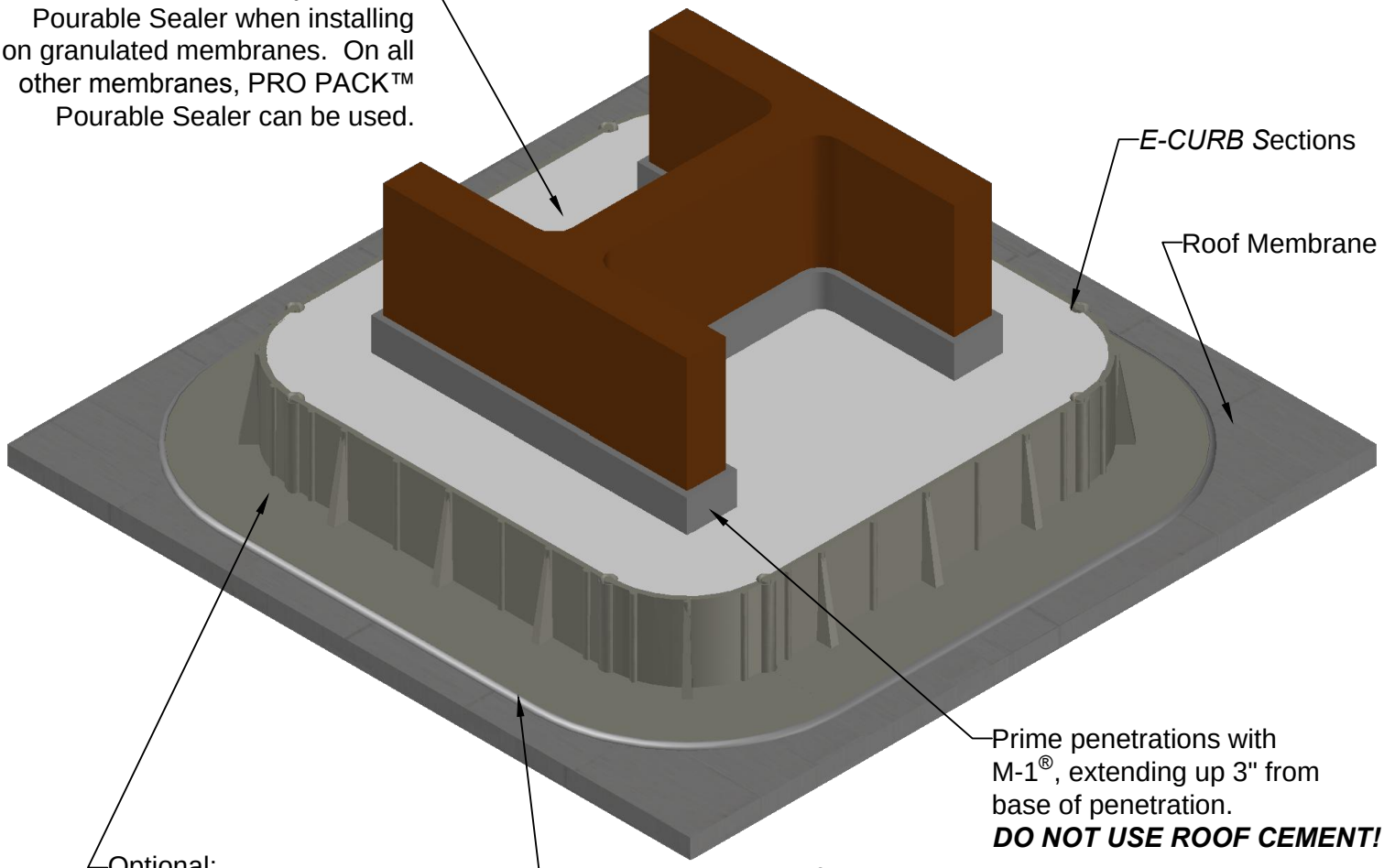

A minimum 1" space is required between all penetrations and the interior wall of all E-CURBs.

CABLE SUPPORT PENETRATION

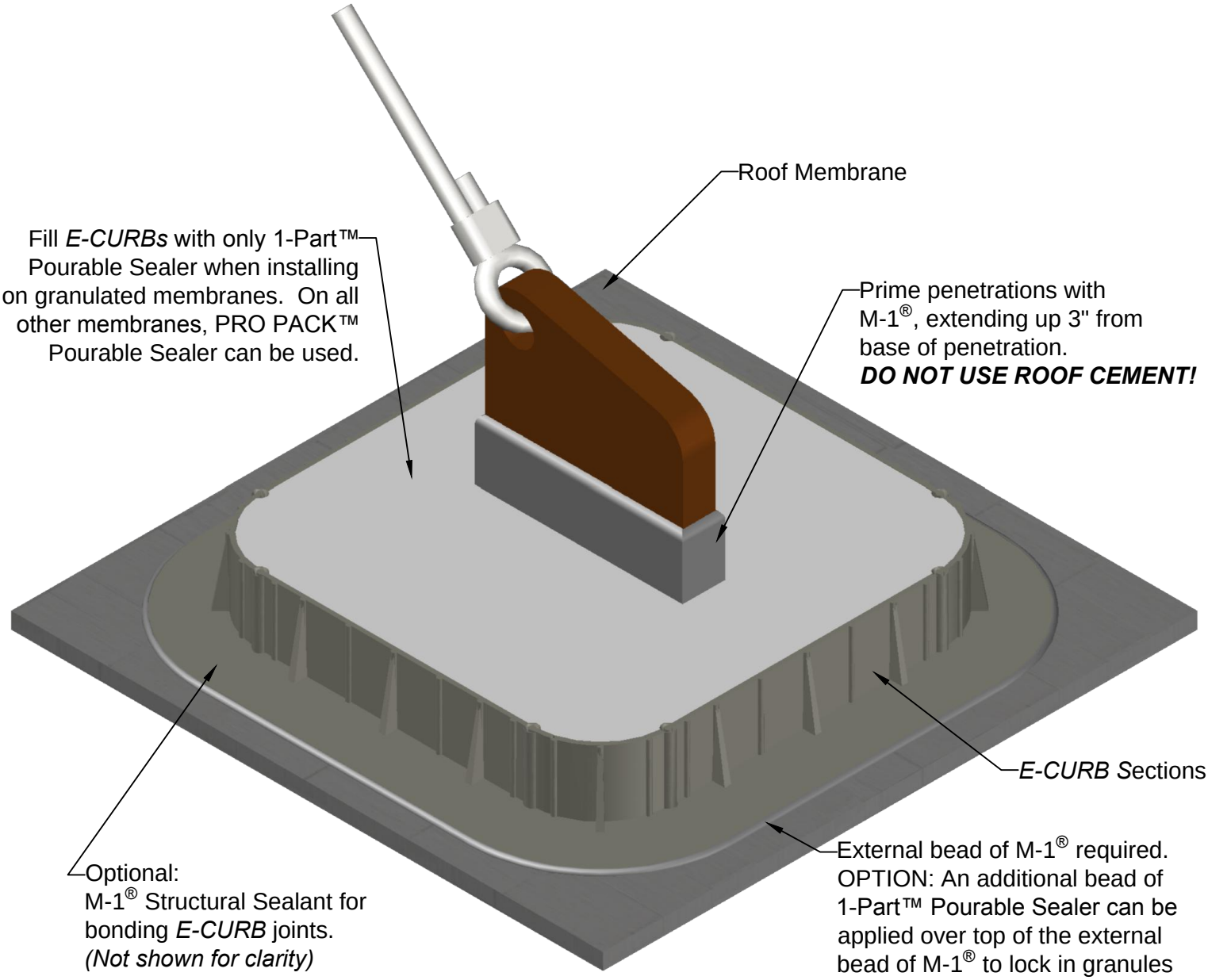

A minimum 1" space is required between all penetrations and the interior wall of all E-CURBs.

CHEM LINK® A SOPREMA® GROUP COMPANY

CONTACT INFORMATION: Customer Service: 800.826.1681
www.ChemLink.com

Date:	Title:	Sheet:	DRW #:	Drawn by:
May 12, 2013	E-CURBs	7 of 15	CL-EC-01	Christian Appold

SOLAR PANEL MOUNT

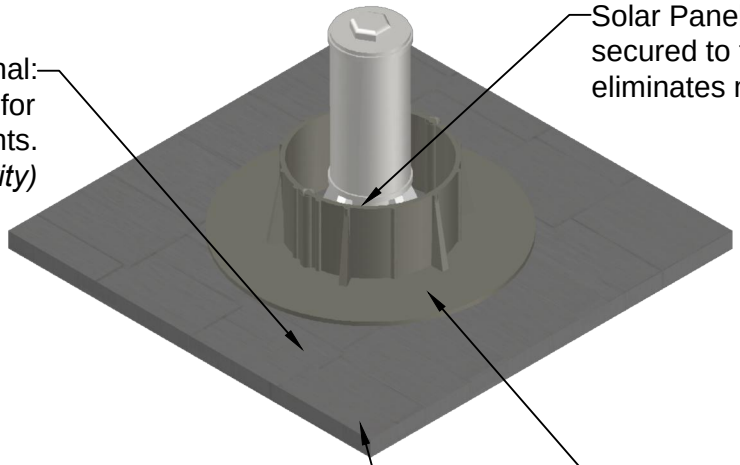

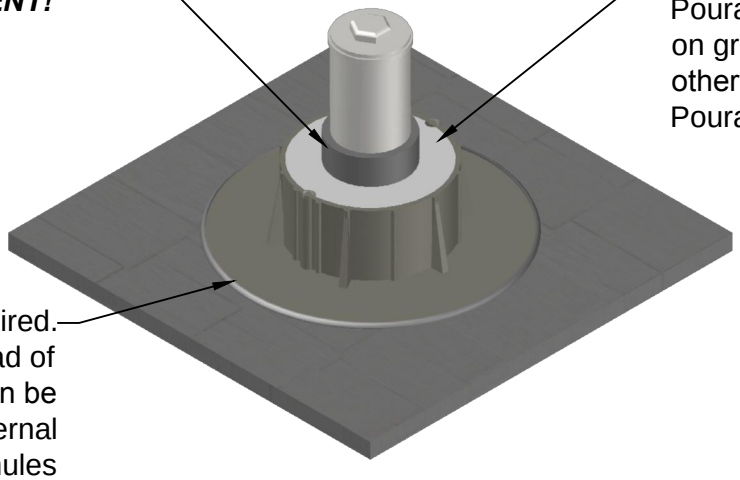

A minimum 1" space is required between all penetrations and the interior wall of all E-CURBs.

CHEM LINK® A SOPREMA® GROUP COMPANY

CONTACT INFORMATION: Customer Service: 800.826.1681
www.ChemLink.com

MACHINERY SCREEN

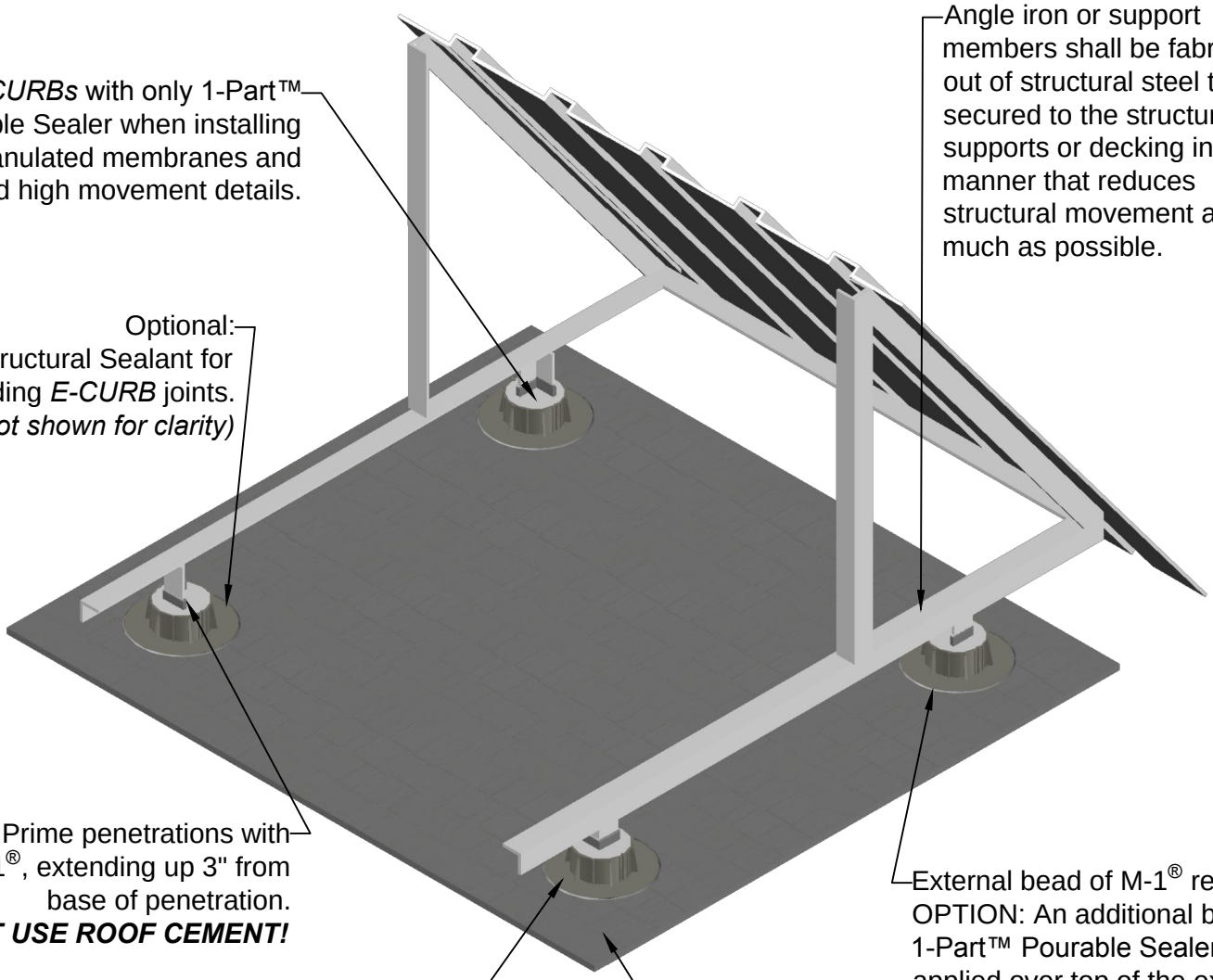

A minimum 1" space is required between all penetrations and the interior wall of all E-CURBs.

VERTICAL WALL PENETRATIONS

Trowel application of DuraLink 50™ flush with the top of the *E-CURB*.

Optional: DuraLink 50™ Sealant for bonding *E-CURB* scarf joints. *(Not shown for clarity)*

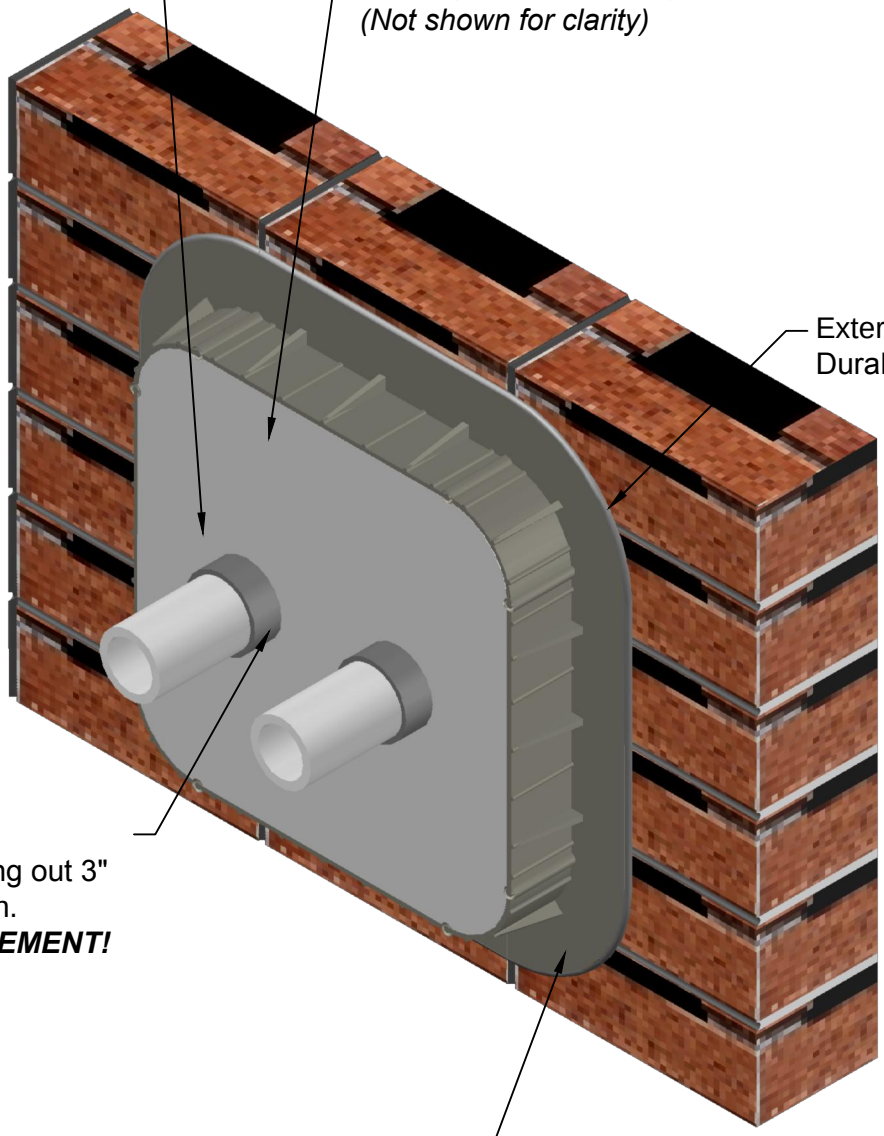

External bead of DuraLink 50™ required.

Prime penetrations with DuraLink 50™, extending out 3" from base of penetration. ***DO NOT USE ROOF CEMENT!***

E-CURB Sections

A minimum 1" space is required between all penetrations and the interior wall of all E-CURBs.

ANGLE IRON PENETRATION

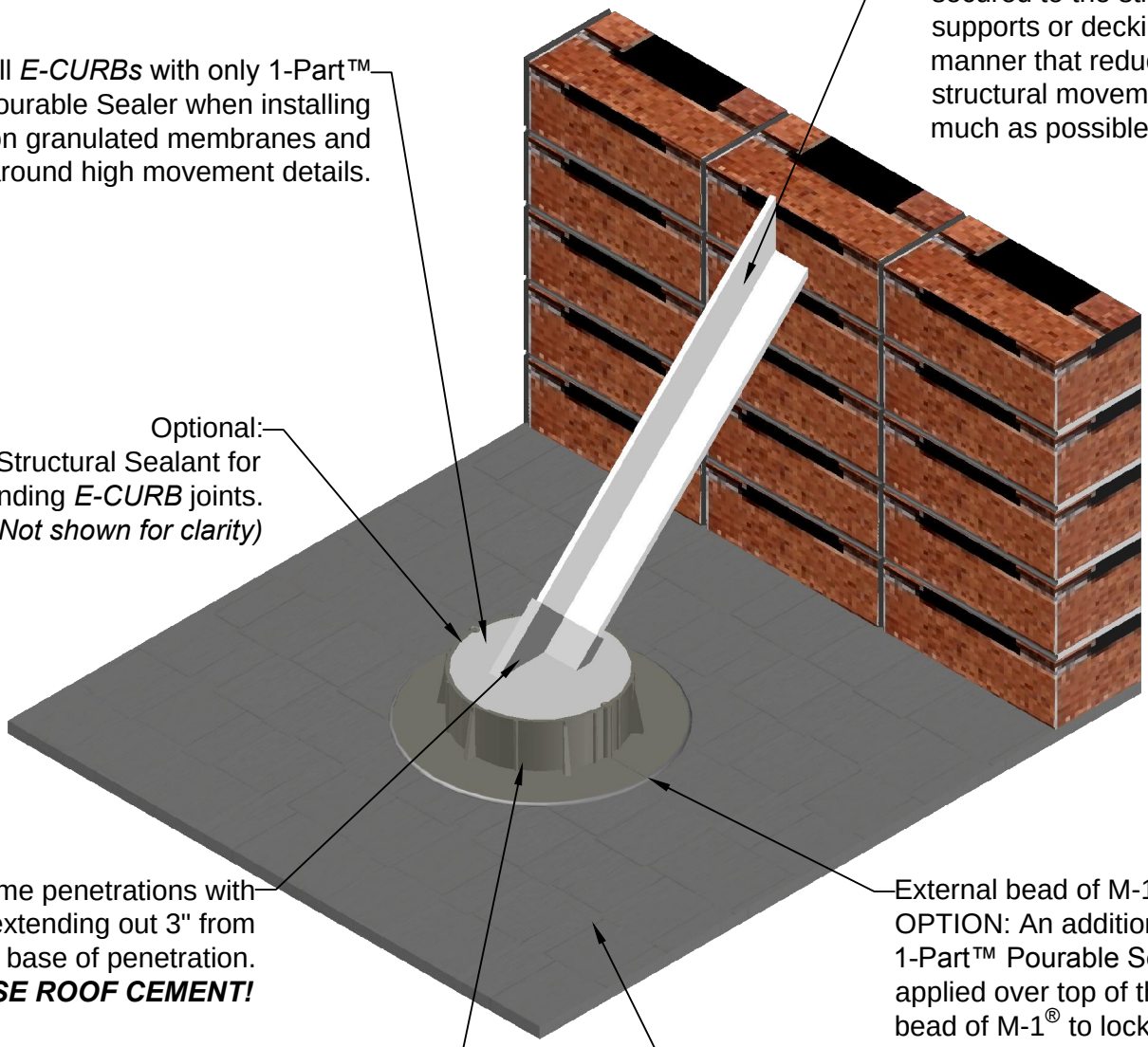

Angle iron or support members shall be fabricated out of structural steel that is secured to the structural supports or decking in a manner that reduces structural movement as much as possible.

Fill *E-CURBs* with only 1-Part™ Pourable Sealer when installing on granulated membranes and around high movement details.

Optional: M-1® Structural Sealant for bonding *E-CURB* joints. *(Not shown for clarity)*

Prime penetrations with M-1®, extending out 3" from base of penetration. ***DO NOT USE ROOF CEMENT!***

External bead of M-1® required. OPTION: An additional bead of 1-Part™ Pourable Sealer can be applied over top of the external bead of M-1® to lock in granules on granulated roof membranes.

*E-CURB S*ections

Roof Membrane

A minimum 1" space is required between all penetrations and the interior wall of all E-CURBs.

CHEM LINK® A SOPREMA® GROUP COMPANY

CONTACT INFORMATION: Customer Service: 800.826.1681
www.ChemLink.com

SLOPED ROOF PENETRATION

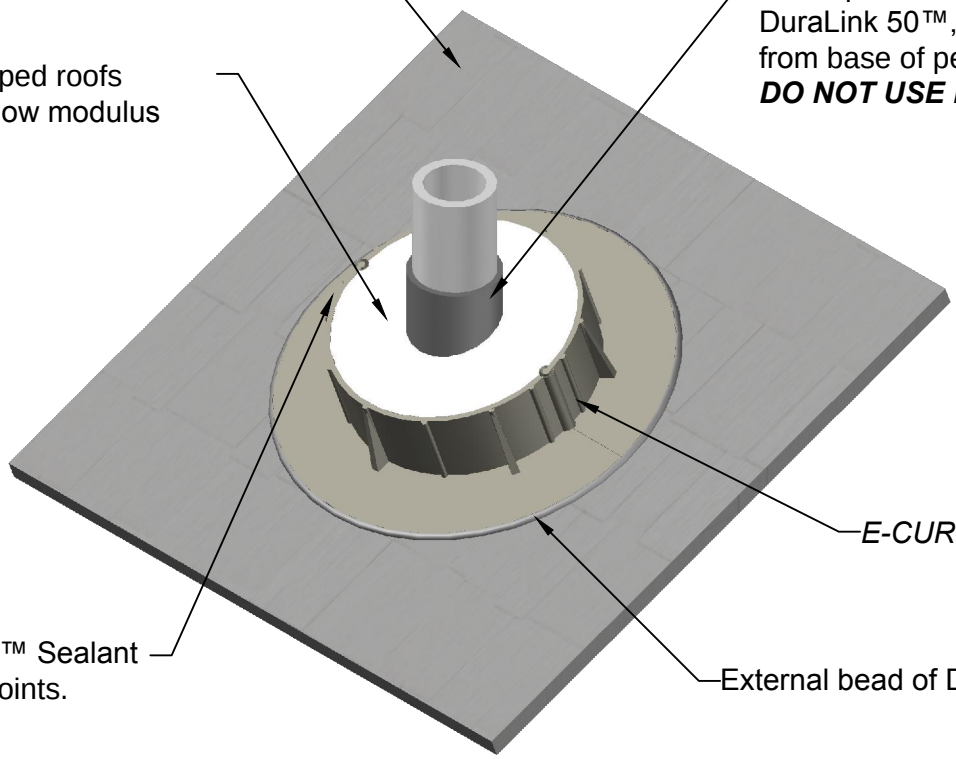

A minimum 1" space is required between all penetrations and the interior wall of all E-CURBs.

CHEMLINK® A SOPREMA® GROUP COMPANY

CONTACT INFORMATION: Customer Service: 800.826.1681
www.ChemLink.com

PENETRATION NEAR WALL FLASHING

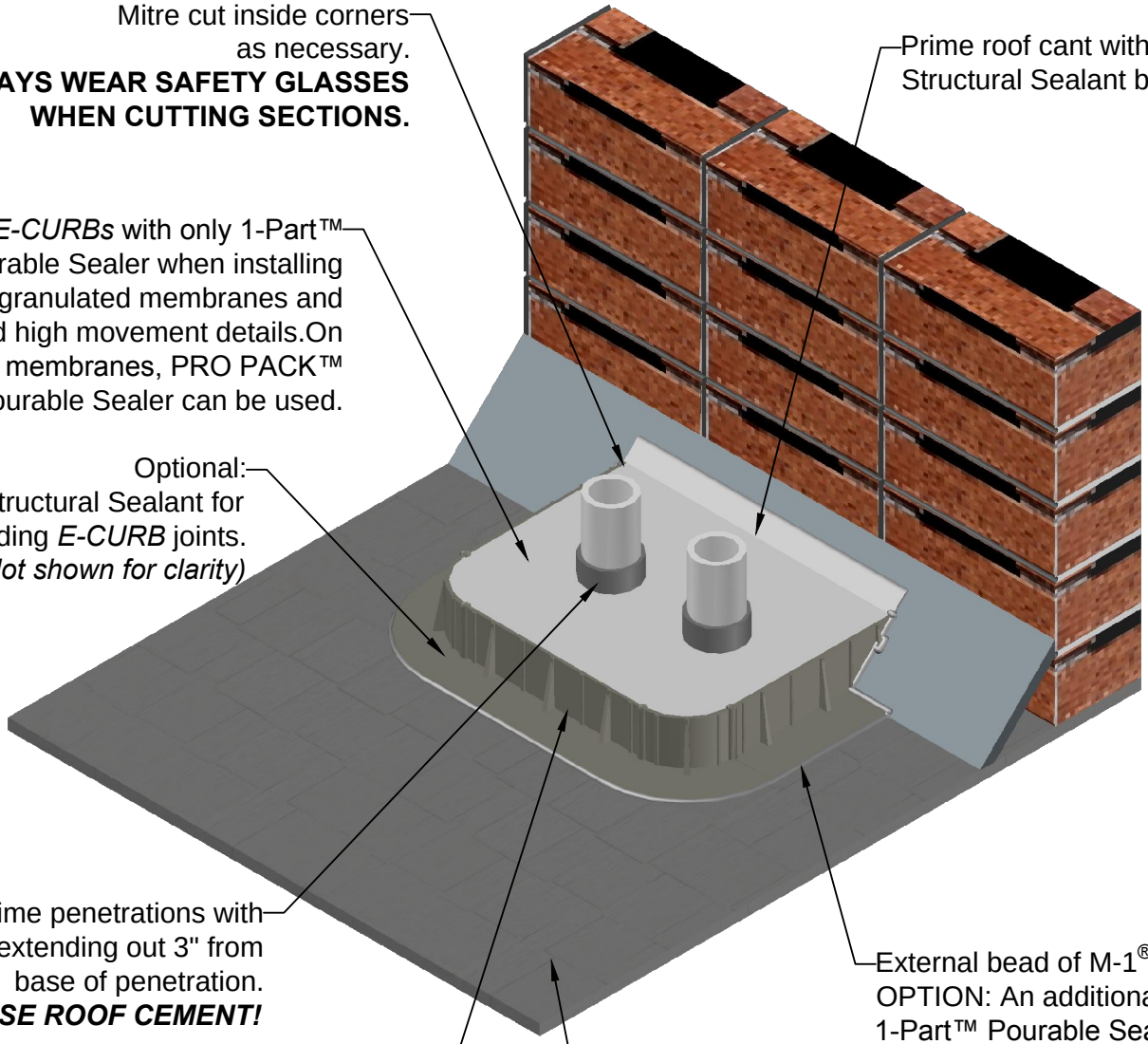

Mitre cut inside corners as necessary.
ALWAYS WEAR SAFETY GLASSES WHEN CUTTING SECTIONS.

Fill *E-CURBs* with only 1-Part™ Pourable Sealer when installing on granulated membranes and around high movement details.On all other membranes, PRO PACK™ Pourable Sealer can be used.

Optional:
M-1® Structural Sealant for bonding *E-CURB* joints.
(Not shown for clarity)

Prime penetrations with M-1®, extending out 3" from base of penetration.
DO NOT USE ROOF CEMENT!

*E-CURB S*ections

Roof Membrane

Prime roof cant with M-1® Structural Sealant before filling.

External bead of M-1® required. OPTION: An additional bead of 1-Part™ Pourable Sealer can be applied over top of the external bead of M-1® to lock in granules on granulated roof membranes.

A minimum 1" space is required between all penetrations and the interior wall of all E-CURBs.

HOT STACK PENETRATION (200°F to 400°F)

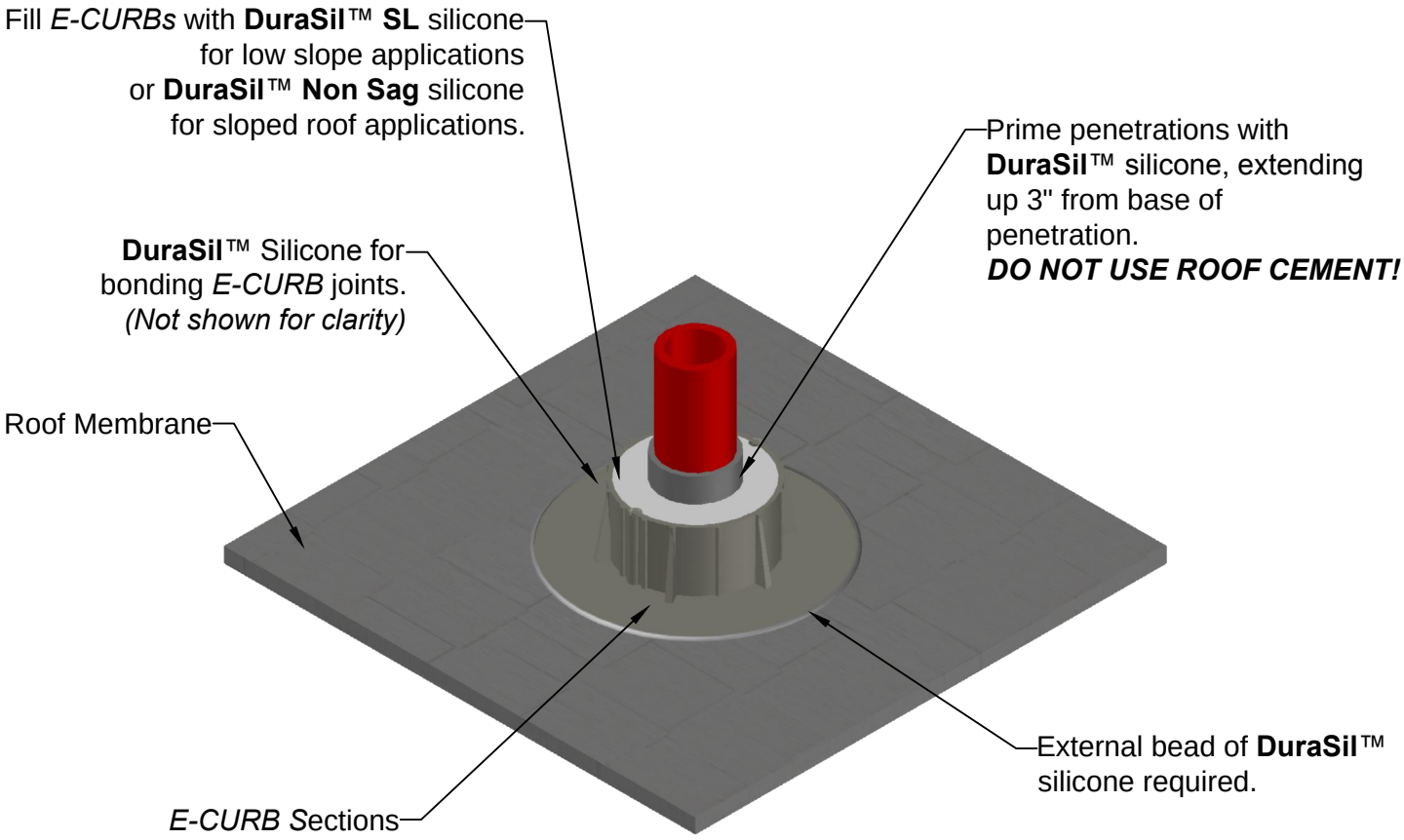

A minimum 1" space is required between all penetrations and the interior wall of all E-CURBs.

CHEM LINK® A SOPREMA® GROUP COMPANY

CONTACT INFORMATION: Customer Service: 800.826.1681
www.ChemLink.com

Date:	Title:	Sheet:	DRW #:	Drawn by:
May 12, 2013	E-CURBs	14 of 15	CL-EC-01	Christian Appold

TPO MEMBRANE

Apply *ChemLink* TPO Primer with a brush to the surface of the TPO membrane. Primer shall extend from the base of the pentration(s) to 1" beyond the outside perimeter of the *E-CURB.*

Allow TPO primer to dry before installing the *E-CURB*.

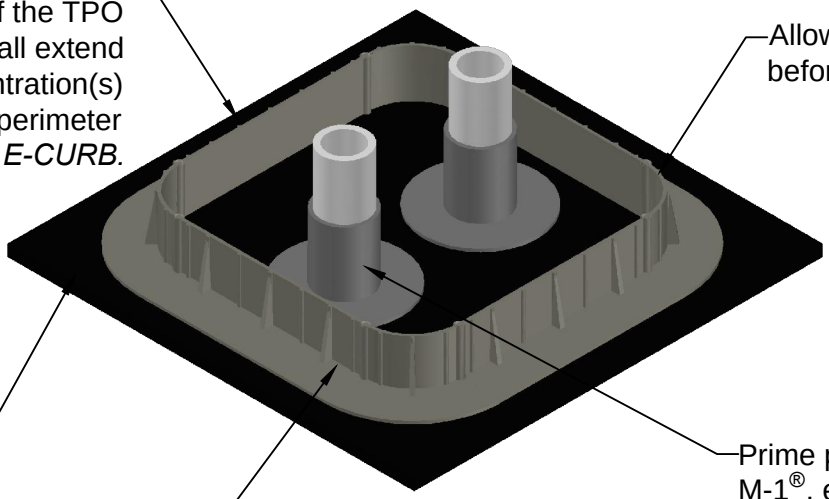

TPO Roof Membrane

Prime penetrations with M-1®, extending up 3" from base of penetration.
DO NOT USE ROOF CEMENT!

*E-CURB S*ections

Optional:
M-1® Structural Sealant for bonding *E-CURB s*carf joints.
(Not shown for clarity)

Fill *E-CURBs* with only 1-Part™ Pourable Sealer or PRO PACK™ Pourable Sealer can be used.

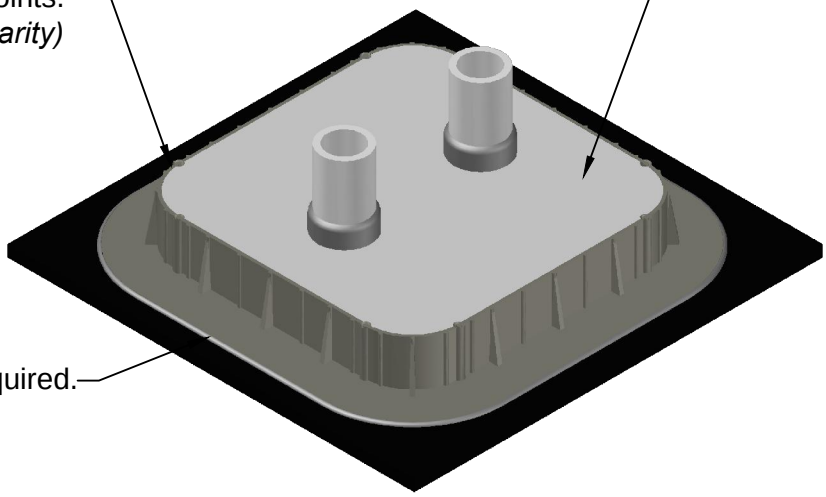

External bead of M-1® required.

A minimum 1" space is required between all penetrations and the interior wall of all E-CURBs.

CHEMLINK® A SOPREMA® GROUP COMPANY

CONTACT INFORMATION: Customer Service: 800.826.1681
www.ChemLink.com

Date:	Title:	Sheet:	DRW #:	Drawn by:
May 12, 2013	E-CURBs	15 of 15	CL-EC-01	Christian Appold