Product data sheet
Characteristics

HU361RB
Safety switch, heavy duty, non fusible, 30A, 3 poles, 30 hp, 600 VAC/DC, NEMA 3R, bolt-on hub,



Main

Product	Single Throw Safety Switch
Current Rating	30 A
Number of Poles	3
Voltage Rating	600 V AC/DC
Disconnect Type	Non-fusible disconnect
Short Circuit Current Rating	200 kA maximum
Mounting Type	Surface
Factory Installed Neutral	None
Electrical Connection	Lugs
Duty Rating	Heavy duty
Certifications	UL listed file E2875
Enclosure Rating	NEMA 3R galvannealed steel
Wire Size	AWG 12...AWG 6 aluminium AWG 14...AWG 6 copper

Complementary

Short-circuit withstand	200 kA
Maximum Horse Power Rating	5 Hp 240 V AC 50...60 Hz 1 phase NEC 430.52 10 Hp 240 V AC 50...60 Hz 3 phase NEC 430.52 7.5 Hp 480 V AC 50...60 Hz 1 phase NEC 430.52 20 Hp 480 V AC 50...60 Hz 3 phase NEC 430.52 10 Hp 600 V AC 50...60 Hz 1 phase NEC 430.52 30 Hp 600 V AC 50...60 Hz 3 phase NEC 430.52 5 Hp 250 V DC NEC 430.52 15 hp 600 V DC
Tightening torque	45 Lbf.In (5.08 N.m) 0.02 in² (13.3 mm²) AWG 6) 40 Lbf.In (4.52 N.m) 0.01 in² (8.367 mm²) AWG 8) 35 lbf.in (3.95 N.m) 0.00…0.01 in² (2.06…5.261 mm²) AWG 14...AWG 10)
Width	7.55 in (191.77 mm)
Height	14.88 in (377.95 mm)
Maximum Depth	4.86 in (123.44 mm)

Ordering and shipping details

Category	00009 - H&HU SW,2&3P,N3R,30-200A
Discount Schedule	DE1
GTIN	00785901505600
Nbr. of units in pkg.	1
Package weight(Lbs)	8.16 lb(US) (3.70 kg)
Returnability	Yes
Country of origin	US

Packing Units

Unit Type of Package 1	PCE
Package 1 Height	6.60 in (16.764 cm)
Package 1 width	7.90 in (20.066 cm)
Package 1 Length	16.40 in (41.656 cm)

The information provided in this documentation contains general descriptions and/or technical characteristics of the performance of the products contained herein.
This documentation is not intended as a substitute for and is not to be used for determining suitability or reliability of these products for specific user applications.
It is the duty of any such user or integrator to perform the appropriate and complete risk analysis, evaluation and testing of the products with respect to the relevant specific application or use thereof.
Neither Schneider Electric Industries SAS nor any of its affiliates or subsidiaries shall be responsible or liable for misuse of the information contained herein.

Offer Sustainability

Sustainable offer status	Green Premium product
California proposition 65	WARNING: This product can expose you to chemicals including: Lead and lead compounds, which is known to the State of California to cause cancer and birth defects or other reproductive harm. For more information go to www.P65Warnings.ca.gov
REACh Regulation	REACh Declaration
REACh free of SVHC	Yes
EU RoHS Directive	Compliant EU RoHS Declaration
Mercury free	Yes
RoHS exemption information	Yes
China RoHS Regulation	China RoHS Declaration
Environmental Disclosure	Product Environmental Profile
PVC free	Yes

Contractual warranty

Warranty	18 months

HU361RB

Approximate Dimensions

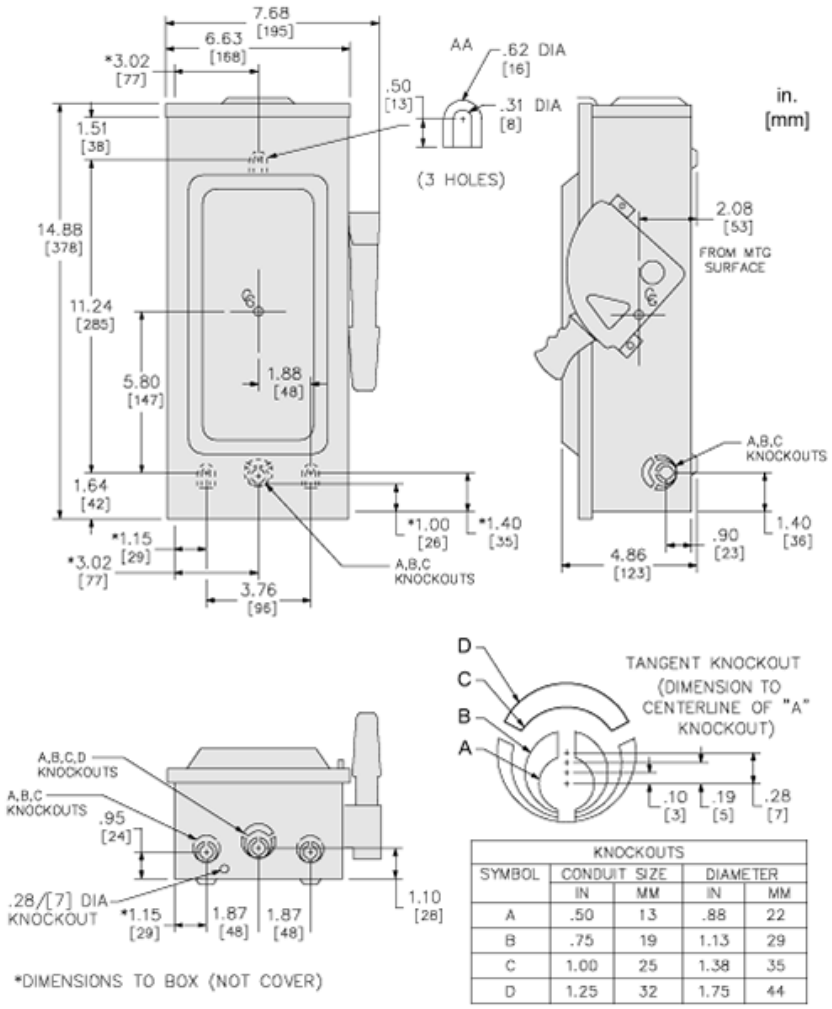

KNOCKOUTS				
SYMBOL	CONDUIT SIZE		DIAMETER	
	IN	MM	IN	MM
A	.50	13	.88	22
B	.75	19	1.13	29
C	1.00	25	1.38	35
D	1.25	32	1.75	44

Connections and Wiring Diagrams

CATALOG NUMBER	VOLTAGE RATINGS	AMPERAGE RATINGS	WIRING DIAG
H221NRB	240VAC,250VDC	30	A
H321NRB	240VAC,250VDC	30	B
H361NRB	600VAC,600VDC	30	B
H361RB	600VAC,600VDC	30	C
HU361RB	600VAC,600VDC	30	D
HU361RBEI	600VAC,600VDC	30	D
HU361NRB	600VAC,600VDC	30	E

WIRING DIAGRAMS

FUSIBLE	NOT FUSIBLE

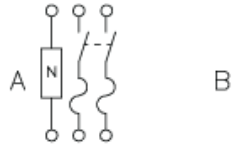

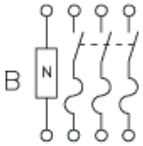

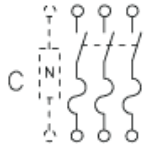

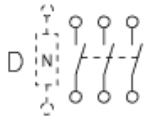

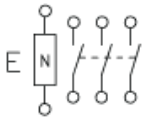

TERMINAL LUGS			
AMPERES	MAX WIRE	MIN WIRE	TYPE
30	#6 AWG	#14 AWG	AL OR CU