DATA SHEET

Pluggable Multi-Pole SPD for Photovoltaic Systems;

ProTec T2-1100PV-9Y-S01/R

Type 2 • Type 1CA PV SPD



Location of Use: Sting box, Inventer
Mode of Protection: (+)-PE, (-)-PE, (+)-(-)
Surge Ratings: I_{Total} = 50 kA (8/20 µs)
EN/UL Category: Type 2 / Type 1CA
Protective Elements: High Energy MOV
Housing: Pluggable Design
Compliance: EN 50539-11:2013 + A1:2014
UL 1449, 4th edition

Technical Data

ProTec T2-1100PV-9Y-S01/R

EN Electrical		
Maximum Continuous Operating DC Voltage	U_{CPV}	1100 V
Nominal Discharge Current (8/20 µs)	I_n	20 kA
Total Discharge Current (8/20 µs)	I_{Total}	50 kA
Voltage Protection Level	U_p	4400 V
Response Time	t_A	< 25 ns
Short-Circuit Current Rating	I_{SCPV}	11 kA
Number of Ports		1
UL Electrical		
Maximum Permitted DC Voltage	V_{pvdc}	1100 V
Voltage Protection Rating	VPR	3000 V
Nominal Discharge Current (8/20 µs)	I_n	20 kA
Short-Circuit Current Rating	SCCR	50 kA
Mechanical & Environmental		
Operating Temperature Range	T_a	-40 °F to +185 °F [-40 °C to +85 °C]
Permissible Operating Humidity	RH	5%...95%
Altitude (max)		13123 ft [4000 m]
Terminal Screw Torque	M_{max}	39.9 lbf·in [4.5 Nm]
Conductor Cross Section (max)		35 mm² (Solid, Stranded) / 25 mm² (Flexible)
		2 AWG (Solid, Stranded) / 4 AWG (Flexible)
Mounting		35 mm DIN Rail, EN 60715
Degree Of Protection		IP 20
Housing Material		Thermoplastic: Extinguishing Degree UL 94 V-0
Thermal Protection		Yes
Operating State / Fault Indication		Green Flag / Not Green Flag
Remote Contacts (RC)		Optional
RC Switching Capacity		AC: 250V/ 1A, 125V/ 1A; DC: 48V/0.5A, 24V/0.5A, 12V/0.5A
RC Conductor Cross Section (max)		1.5 mm² (Solid)
		16 AWG (Solid)
Ordering Code		
ProTec T2-1100PV-9Y-S01-B/R		580.268
ProTec T2-1100PV-9Y-P		58.0267

AWG=American Wire Gauge

Information contained in this document is subject to change at any time without notice.

Internal Configuration

Legend

(A+) - (F+)	*L+*
PV-	*L-*
⏚	*Protective Earth*
RC	*Remote Contacts Optional*

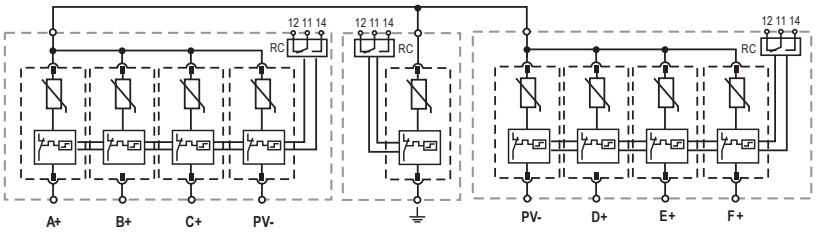

Dimensions & Weights

Weights

ProTec T2-1100PV-9Y-S01/R		
Single Unit Weight	pounds	2.945
	grams	1336

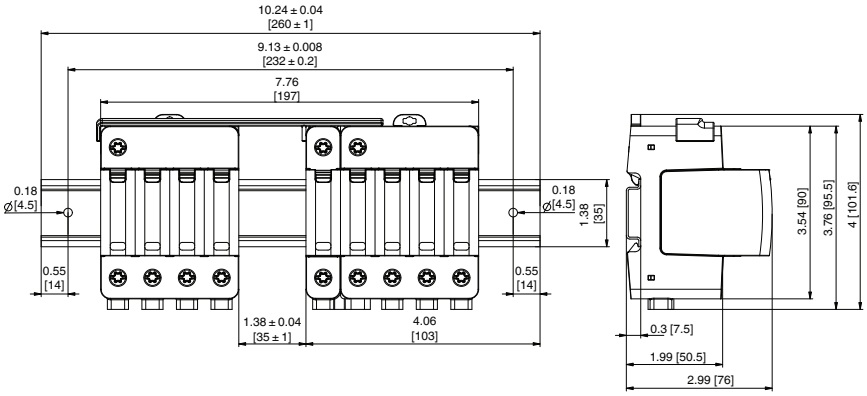

Plug Internal Configuration

ProTec T2-XXXPV-P

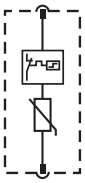

Dimensions & Weights

ProTec T2-550PV-P

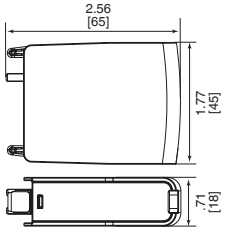

Weights

ProTec T2-550PV-P		550
Single Unit Weight	pounds	.157
	grams	71

inches
[mm]

Information contained in this document is subject to change at any time without notice.

RoHS COMPLIANT

© 2017 Raycap All rights reserved.