S-5!®

The Right Way

CorruBracket 500T PV™

CorruBracket 500T PV is your solar solution for corrugated roofing profiles common in metric profiling markets and is compatible with 16-22 mm tall and 76 mm crest to crest corrugated roofing profiles.

Faster Installation with the PVKIT™ 2.0

Dimension from the bottom of the roof profile to the module glass is over 100 mm, providing ample added height for solar panel attachment. The 500T PV seamlessly integrates with the PVKIT to accommodate a rail-less PV attachment.

PVKIT integration also significantly reduces jobsite logistics - with no need for large van or truck for material transport, minimal roof staging (without rails), and a lay and play module to roof assembly resulting in up to 50% faster installation time. All mounting hardware for a 10kW system weighs less than 15kg - carry it up the ladder in your pack!

Attachment Flexibility

Affixed to the crest of the corrugation, CorruBracket 500T PV leaves the drainage plane free of holes to protect against leaks. This bracket can be attached directly to the sheeting, accommodating attachment anywhere along the corrugation making module layout a snap.

EPDM = No mess waterproofing = Outlasts the life of the roof

With no messy sealants to apply, CorruBracket 500T PV comes with a factory-applied EPDM rubber gasket seal on the base for reliable weathertightness.

The S-5! patented "V" configuration of this part prevents over-compression of the ribs under load and the reservoir conceals the EPDM from exposure, preventing UV degradation.



CorruBracket 500T PV™

FEATURES AND BENEFITS

- Open channel for wire containment/ management
- Bracket allows glass to sit 100+ mm above valley of corrugation
- Fix bracket into sheeting only - allowing module placement anywhere on roof
- Slotted top hole offers over 25 mm of E-W adjustability
- 6000 Series AL; 300 Series SS hardware
- PVKIT™ compatible
- Factory-applied EPDM for no-mess waterproofing
- EPDM reservoir for protection from harmful sunlight and to prevent over-compression of waterproofing
- Fix micro inverters or optimizers

Made in USA

888-825-3432 | www.S-5.com |

The Right Way!® to attach almost anything to metal roofs!

S-5!®
The Right Way

You can use the CorruBracket 500T PV for almost any attachment needed on 16-22 mm tall and 76 mm crest to crest corrugated metal roofing. Seamlessly combine with the PVKIT for the most cost-effective PV mounting solution for corrugated roofs.

The CorruBracket 500T PV is a structural aluminum attachment bracket and is compatible with the most common metal roofing materials. For design assistance, ask your distributor, or visit **www.S-5.com** for the independent lab test data that can be used for load-critical designs and applications. Also, please visit our website for more information including CAD details, metallurgical compatibilities, and specifications. S-5! holding strength is unmatched in the industry. S-5! tested holding strength in 0.45 mm sheet is over 3.51 kN.

Example Profile

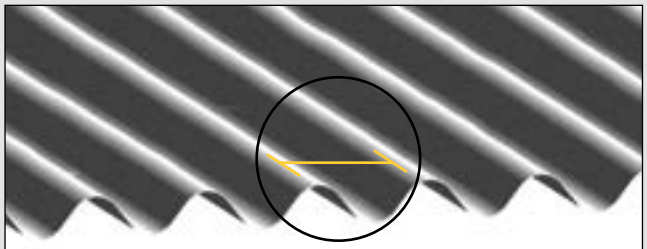

Fits Profiles 76 mm - Crest to Crest Width

Example Applications





CorruBracket 500T PV™

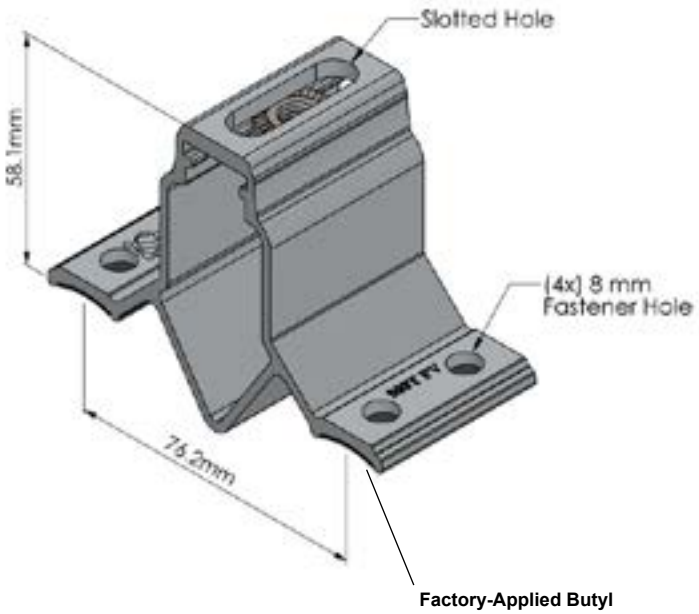

Please note: All measurements are rounded to the first decimal place. Contact your distributor for information about hardware requirements.

Installation is Simple!

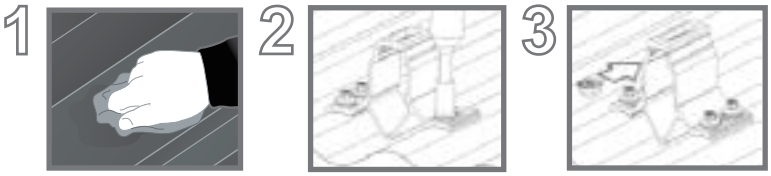

- **No surface preparation** necessary
- Simply wipe away excess oil and debris, align, and apply
- Secure directly into crest of corrugation by driving appropriate screws through bracket holes into roofing sheet
- **CorruBracket 500T PV** is mounted directly into the crest of the corrugation, straddling the valley

S-5!® Warning! Please use this product responsibly!

Products are protected by multiple U.S. and foreign patents. For published data regarding holding strength, bolt torque, patents and trademarks visit the S-5! website at www.S-5.com.

Copyright 2026, Metal Roof Innovations, Ltd. S-5! products are patent protected.
S-5! aggressively protects its patents, trademarks, and copyrights. Version 011426.

Distributed by