SERAPHIM®

SHIFTING · THE FUTURE
www.seraphim-energy.com

Sable 425-450w

High efficiency bifacial modules

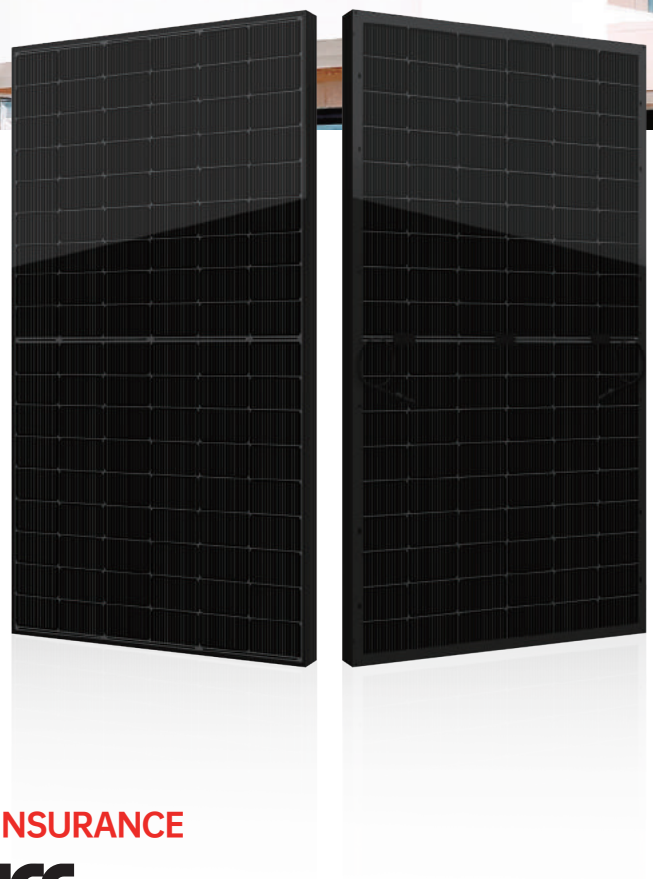

TOPCon | **182mm**

TOPCon MODULE ADVANTAGE

- Multi-Busbar technology
- Superior load capacity
- High module efficiency
- Excellent low-light performance
- Lower annual attenuation Longer warranty
- Low BOS and LCOE
- Reduce hot spot effect
- Higher bifaciality

QUALITY SYSTEM

ISO9001 / ISO14001 / ISO45001

PRODUCT CERTIFICATION

TÜV 500 | CE | PV CYCLE | CLEAN ENERGY COUNCIL MEMBER | cec | C US

INSURANCE

PICC

WARRANTY

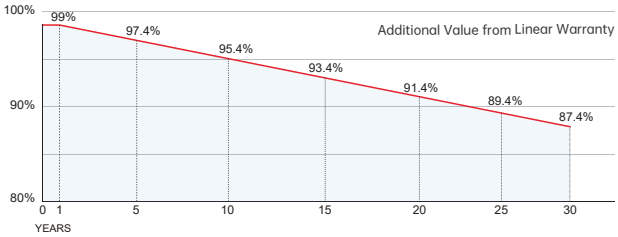

25 YEARS Guarantee on product material and workmanship

30 YEARS Linear power output warranty

Specifications are subject to change without further notification SRP-DS-EN-2025T1106© Copyright 2025 Seraphim

SERAPHIM SOLAR SYSTEM USA INC.
Add: 16192 Coastal Highway, Lewes, Delaware, United States
Email: info@seraphim-energy.com

SERAPHIM®

SHIFTING · THE FUTURE
www.seraphim-energy.com

Mechanical Specifications

External Dimension	1722 x 1134 x 30 mm
Weight	24.0 kg
Solar Cells	182N-TOPCon (108pcs)
Front / Back Glass	2.0mm AR coating semi-tempered glass, low iron
Frame	Black anodized aluminium alloy
Junction Box	IP68, 3 diodes
Output Cables	4.0mm², 250mm(+)/350mm(-) or Customized Length

Packing Configuration

Container	20'GP	40'HQ(USA)
Pieces per Pallet	36	36
Pallets per Container	6	22
Pieces per Container	216	792

Technical drawing

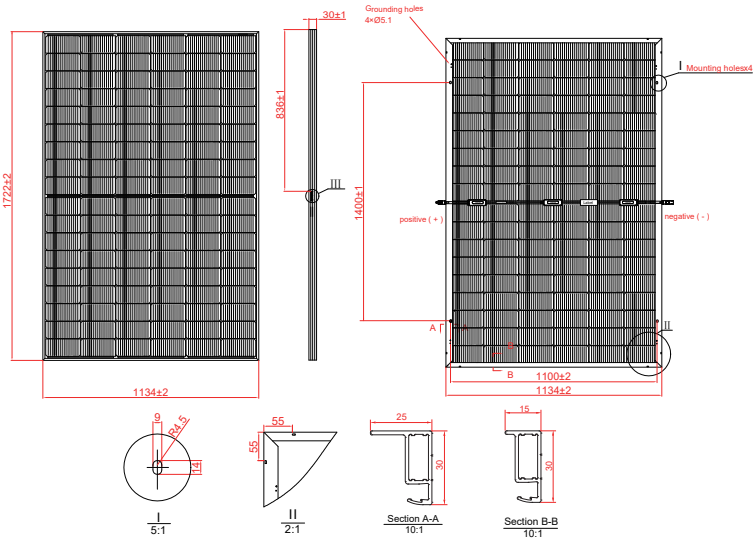

Electrical Characteristics

Module Type	SRP-425-BTD-BG		SRP-430-BTD-BG		SRP-435-BTD-BG		SRP-440-BTD-BG		SRP-445-BTD-BG		SRP-450-BTD-BG	
	Front STC	Front BNPI	Front STC	Front BNPI	Front STC	Front BNPI	Front STC	Front BNPI	Front STC	Front BNPI	Front STC	Front BNPI
Maximum Power -P_{mp}(W)	425	466	430	471	435	477	440	482	445	488	450	493
Open Circuit Voltage -V_{oc}(V)	38.70	38.78	38.90	38.98	39.10	39.18	39.30	39.38	39.50	39.58	39.70	39.78
Short Circuit Current -I_{sc}(A)	13.91	15.25	13.99	15.33	14.07	15.42	14.15	15.51	14.23	15.60	14.31	15.68
Maximum Power Voltage -V_{mp}(V)	32.10	32.18	32.30	32.38	32.50	32.58	32.70	32.78	32.90	32.98	33.10	33.18
Maximum Power Current -I_{mp}(A)	13.24	14.47	13.32	14.55	13.39	14.63	13.47	14.71	13.54	14.79	13.61	14.86
Module Efficiency STC-η_m(%)	21.76		22.02		22.28		22.53		22.79		23.04	
Power Tolerance (W)	(0, +4.99)											

STC: Irradiance 1000 W/m² module temperature 25°C AM=1.5 Power measurement tolerance: +/-3%;Voltage measurement tolerance: +/-3%;Current measurement tolerance: +/-4%
BNPI: front 1000 W/m² rear 135 W/m² Power measurement tolerance: +/-3%;Voltage measurement tolerance: +/-3%;Current measurement tolerance: +/-4%

Rear Side Power Gain(SRP-440-BTD-BG)

Power Gain	10%	15%	20%	25%	30%
Maximum Power -P_{mp} (W)	484	506	528	550	572
Open Circuit Voltage -V_{oc}(V)	39.30	39.30	39.30	39.30	39.30
Short Circuit Current -I_{sc}(A)	15.57	16.27	16.98	17.69	18.40
Maximum Power Voltage -V_{mp}(V)	32.70	32.70	32.70	32.70	32.70
Maximum Power Current -I_{mp}(A)	14.82	15.49	16.16	16.84	17.51

Temperature Ratings

Pmax Temperature Coefficient	-0.29 %/°C
Voc Temperature Coefficient	-0.25 %/°C
Isc Temperature Coefficient	+0.046 %/°C

Application Conditions

Maximum System Voltage	1500V DC
Maximum Series Fuse Rating	25 A
Operating Temperature	-40~+85 °C
Nominal Operating Cell Temperature	45±2 °C
Bifaciality	80%±5%
Mechanical Load	Front side 5400 Pa / Back side 2400 Pa

I-V Curve

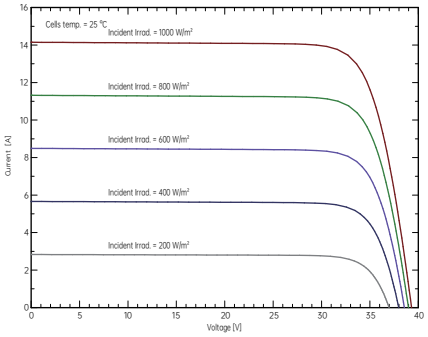

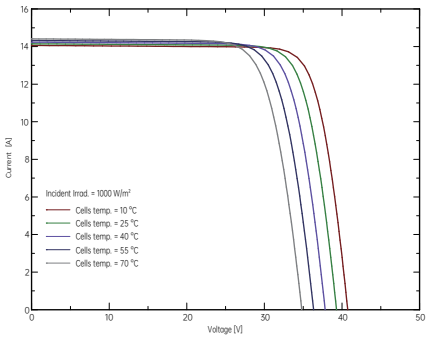

Specifications are subject to change without further notification SRP-DS-EN-2025T1106© Copyright 2025 Seraphim

SERAPHIM SOLAR SYSTEM USA INC.
Add: 16192 Coastal Highway, Lewes, Delaware, United States
Email: info@seraphim-energy.com